BMA Connectors

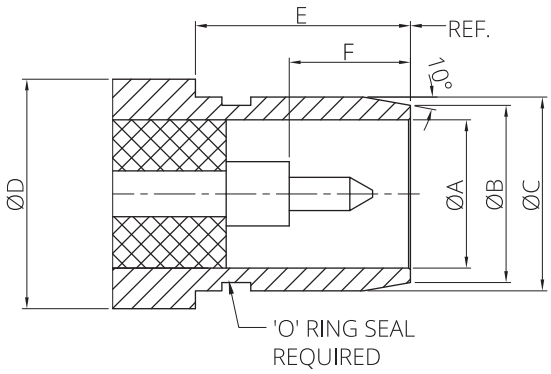

Plug (Male Pin)

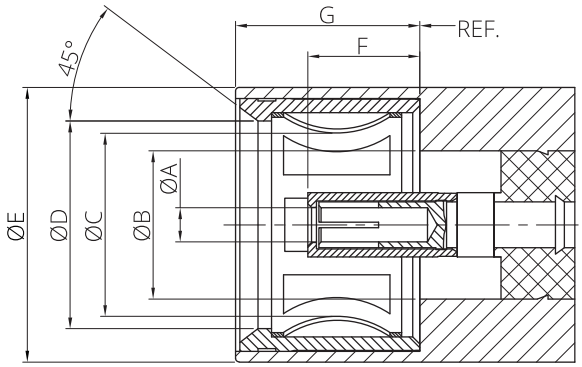

Jack (Female Socket)

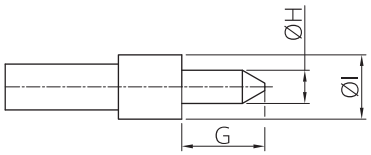

Interface Dimensions

LTR.	Plug (Male Pin)		Jack (Female Socket)	
	Min.(mm./in.)	Max.(mm./in.)	Min.(mm./in.)	Max.(mm./in.)
A	4.09/.161 nom.		1.78/.070 nom.	
B	4.88/.192 nom.		4.09/.161 nom.	
C	5.31/.209	5.35/.211	——	5.08/.200
D	7.62/.300 nom.		5.71/.225	——
E	5.03/.198	——	7.37/.290	——
F	3.25/.128	——	3.05/.120	3.23/.127
G	2.29/.090 nom.		——	5.03/.198
H	0.90/.035	0.94/.037		
I	1.78/.070 nom.			

Electrical	Environmental
Impedance: 50 Ohms **Frequency range:** DC~22 GHz **VSWR:** 1.06+.01F (GHz) **Attenuation:** .050 x √F (GHz) **Insulation Resistance:** 5000 megohms **Contact Resistance:** Center contact : 5 mΩ max. Outer contact : 2.5 mΩ max. **RF Leakage:** - (90 - f (GHz)) dB for gold and BBR connector body - (80 - f (GHz)) dB for passivated connector body	**Temperature Range:** -55℃~+165℃ **Thermal cycling:** MIL-STD-202, Method 107, Condition B, -65°C / +125°C **Vibration:** MIL-STD-202, Method 204, Condition D, 20 g **Moisture resistance:** MIL-STD-202, Method 106 **Salt Spray:** MIL-STD-202, Method 101, Condition A, 96H

Mechanical	Material & Finishes
BMA Interface Per MIL-STD-348A **Durability:** 500 cycles min. **Force to Engage:** 13.3 N MAX. **Force to Disengage:** 0.56 N MIN.	**Contacts:** Brass, Gold plated / Beryllium copper, Gold Plated **Body:** Brass, Gold plated / Stainless steel, Passivated **Insulators:** PTFE