REVISIONS			
REV.	DESCRIPTION	DATE	APPROVED
A	INITIAL RELEASE	10/18/18	J. QU

MATERIAL & FINISH
1 BODY: BERYLLIUM COPPER ALLOY, GOLD PLATED
2 OUTER CONTACT: BERYLLIUM COPPER ALLOY, GOLD PLATED
3 CENTER CONTACT: BERYLLIUM COPPER ALLOY, GOLD PLATED
4 INSULATOR: PEI
5 RESISTANCE: BERYLLIUM OXIDE

ENVIRONMENTAL DATA:
1 OPERATING TEMPERATURE RANGE: -55℃~+125℃
2 STORAGE TEMPERATURE RANGE: -55℃~+125℃
3 2011/65/EU(RoHS) AND 2015/863/(RoHS): COMPLIANT
4 1999/45/EC(REACH): COMPLIANT

ELECTRICAL DATA:
1 IMPEDANCE: 50 OHMS
2 FREQUENCY RANGE: DC~18 GHz
3 VSWR: 1.35 MAX.
4 AVERAGE POWER: 0.25 WATTS AVERAGE TO 25°C AMBIENT TEMPERATRUE, DERATED LINEARLY TO 0 W @ 125°C

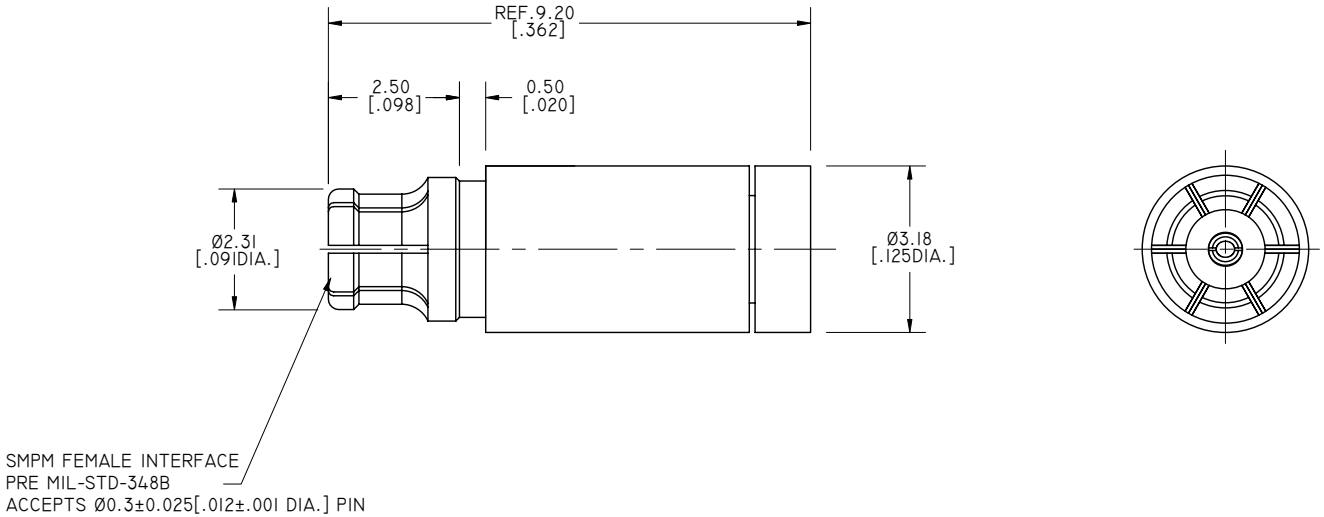

DRAWN	P. CHEN	DATE	10/18/18
CHECKED	L. YANG	DATE	10/18/18
APPROVED	J. QU	DATE	10/18/18

UNLESS OTHERWISE SPECIFIED DIMENSIONS ARE IN MILLINMETERS, DIMENSIONS IN [ ] ARE IN INCHES FOR CUSTOMER REFERENCE ONLY UNLESS OTHERWISE SPECIFIED TOLERANCE ARE:

.XX	±0.13 [.005'']
.X	±0.20 [.008'']
X	±0.50 [.019'']
.X°	±1°
X°	±2°

THESE DRAWINGS AND SPECIFICATIONS ARE THE PROPERTY OF ANOISON ELECTRONICS LTD AND SHOULD NOT BE USED WITHOUT WRITTEN PERMISSION COPYRIGHT © 2018 ANOISON ELECTRONICS LTD

ANOISON
...we create connection for technologies

TITLE
COAXIAL TERMINATION
SMPM FEMALE, 0.25 WATTS, DC~18GHZ

VIEW

PART NO.
ANO 794-205

SIZE	SCALE	SHEET	REV.
A3	10:1	1/1	A