REVISIONS			
REV.	DESCRIPTION	DATE	APPROVED
A	INITIAL RELEASE	03/24/20	J. QU
B	DRAWING CHANGED	10/21/21	J. QU

MATERIAL & FINISH:

1 BODY: BRASS, GOLD PLATED
2 CENTER CONTACT: BERYLLIUM COPPER ALLOY, GOLD PLATED
3 INSULATOR: PEI
4 COUPLING NUT: BRASS, GOLD PLATED
5 RADIATOR: ALUMINIUM, BLACK

ENVIRONMENTAL DATA:

1 TEMPERATURE RANGE: -55℃~+125℃
2 2011/65/EU(RoHS) AND 2015/863/(RoHS): COMPLIANT
3 1907/2006/EC(REACH) AND 1999/45/EC(REACH): COMPLIANT

ELECTRICAL DATA:

1 IMPEDANCE: 50 Ω
2 FREQUENCY RANGE: DC~40 GHz
3 VSWR: 1.25 MAX.
4 AVERAGE POWER: MAXIUM POWER 10 WATTS AVERAGE TO 25°C AMBIENT TEMPERATRUE, DERATED LINEARLY TO 1W @ 125°C
5 PEAK POWER: MAXIUM POWER 100 W (5μS PLUSE WIDTH WITH THE MAXIMUM 2.5% DUTY CYCLE)
6 ATTENUATOR ACCURACY: SEE TABLE

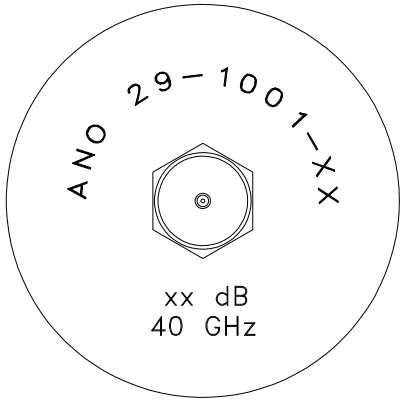

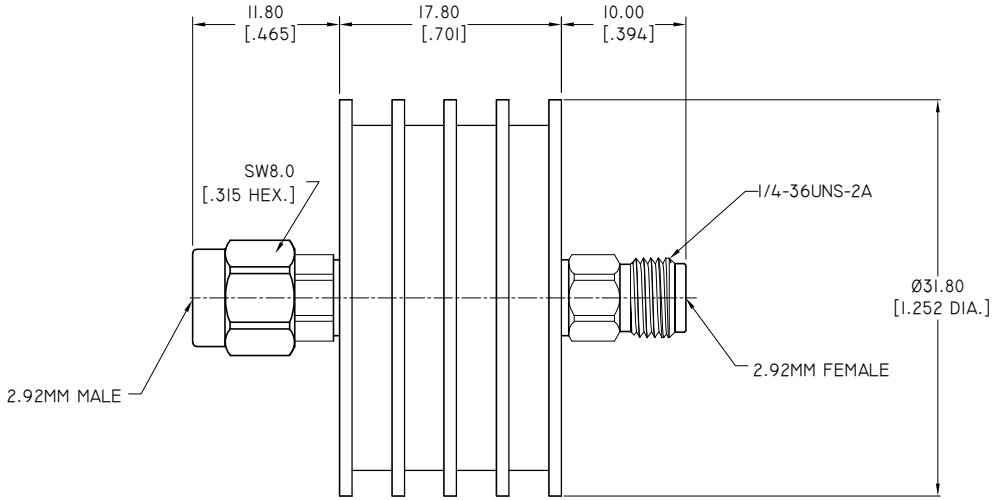

PART NO.	ATTENUATION VALUES & ACCURACY		
	1 DB ~ 10 DB	20 DB	30 DB
ANO 29-1001-XX	$^{+1.0}_{-0.7}$ DB	$^{+1.0}_{-0.7}$ DB	$^{+1.0}_{-0.7}$ DB
NOTE: XX REFER TO ATTENUATION VALUE IN DB			

DRAWN	W. YANG	DATE	10/21/21
CHECKED	L. YANG	DATE	10/21/21
APPROVED	J. QU	DATE	10/21/21

UNLESS OTHERWISE SPECIFIED DIMENSIONS ARE IN MILLINMETERS, DIMENSIONS IN [ ] ARE IN INCHES FOR CUSTOMER REFERENCE ONLY UNLESS OTHERWISE SPECIFIED TOLERANCE ARE:

.XX	±0.13 [.005"]
.X	±0.25 [.010"]
X	±0.50 [.019"]
.X°	±1°
X°	±2°

THESE DRAWINGS AND SPECIFICATIONS ARE THE PROPERTY OF ANOISON ELECTRONICS LTD AND SHOULD NOT BE USED WITHOUT WRITTEN PERMISSION COPYRIGHT © 2021 ANOISON ELECTRONICS LTD

ANOISON

TITLE
ATTENUATOR 2.92MM MALE TO 2.92MM FEMALE
10 WATT, DC~40GHz, BI-DIRECTIONAL

VIEW

PART NO. ANO 29-1001-XX

SIZE	SCALE	SHEET	REV.
A3	2.5:1	1/1	B